DIAGRAM OF A SINGLE FRAME OBSERVATION HIVE

Note #9B

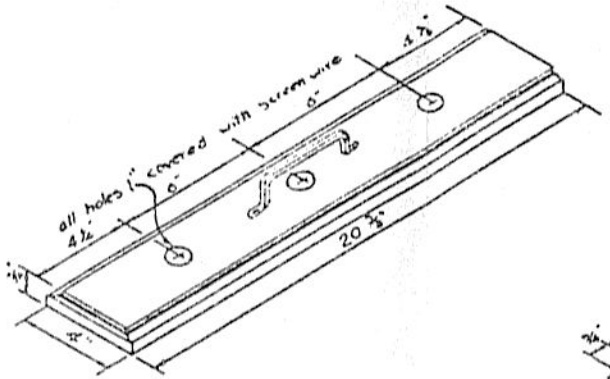

TOP
ONE REQ.

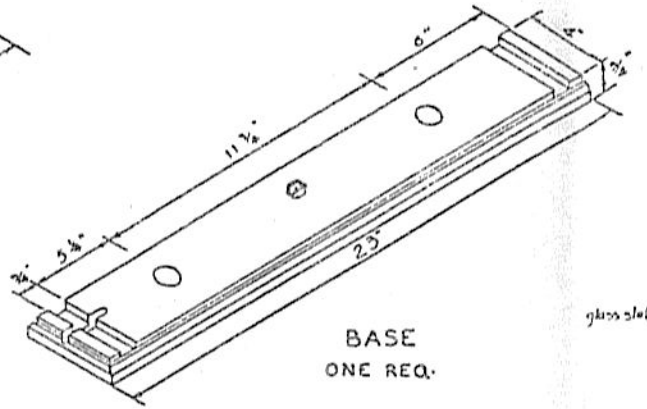

BASE
ONE REQ.

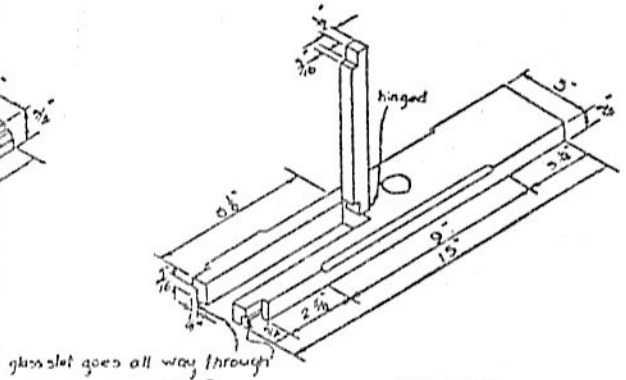

END
TWO REQ.

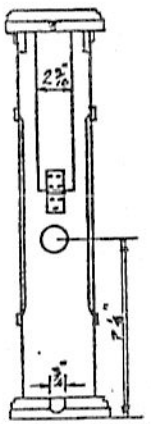

END ELEVATION

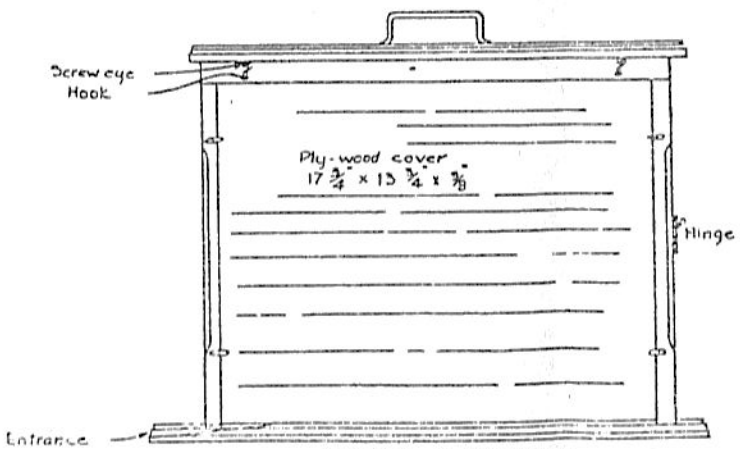

FRONT ELEVATION

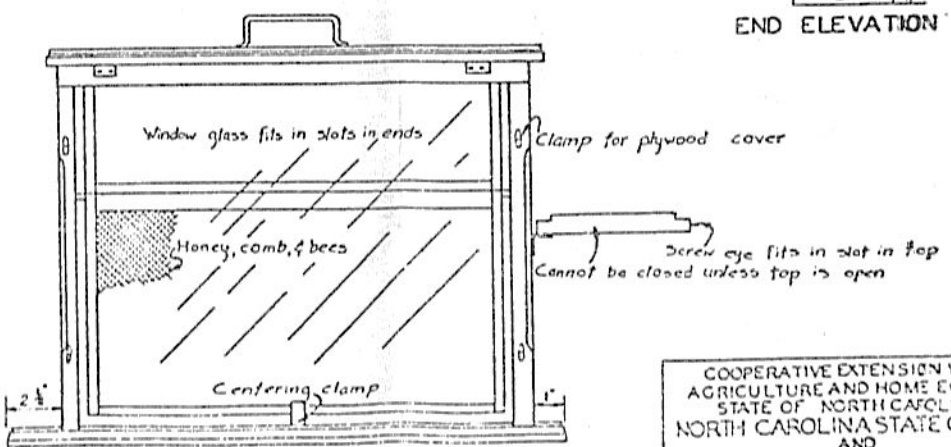

REAR ELEVATION

SCALE 3"=1'-0"

COOPERATIVE EXTENSION WORK IN AGRICULTURE AND HOME ECONOMICS
STATE OF NORTH CAROLINA
NORTH CAROLINA STATE COLLEGE
AND
U.S. DEPT. OF AGRICULTURE COOPERATING
EXT. AGR. ENGINEER - RALEIGH, N.C.

SINGLE FRAME OBSERVATION HIVE

N.C.	NO.	SHEET 1 OF 1
JUNE 1949		